TOTAL PERFORMANCE
VAN'S AIRCRAFT
14401 Keil Road NE, Aurora, Oregon, USA 97002
PHONE 503-678-6545 • FAX 503-678-6560 • www.vansaircraft.com • info@vansaircraft.com
Service Letters and Bulletins: www.vansaircraft.com/public/service.htm

POH rev. 12 REVISION DESCRIPTIONS:

Section 4 Rev. 6 page 3: Added: AOA static port – check for obstructions
Section 4 Rev. 6 page 3: WARNING statement added for wing Fore/Aft play
Section 4 Rev. 6 page 5 & 6: Added: Passenger Briefing item.
Section 4 Rev. 6 page 15 Added: "Leaving the canopy in the open position latched …"
Section 7 Rev. 8 page 9 Fig. 7-3 (D-180/SV/SV knobs/G3X) Changed
Section 7 Rev. 8 page10 Fig. 7-4 (D-180/SV/SV knobs/G3X) Changed

Revision: 12 Date: 01/03/17

VAN'S AIRCRAFT

TOTAL PERFORMANCE

RV-12
PILOT'S OPERATING HANDBOOK

Airplane Serial Number: _____

Airplane Registration Number: _____

Date of Issue: _____
(See Form: 8130-15, Block 4)

Publication No.: DOC 12 POH-SV

RV-12 PILOT'S OPERATING HANDBOOK

REVISION SUMMARY

SECTION	REVISION	DATE
COVER PAGE ii,iii,iv	12	01/03/17
1	4	06/14/16
2	7	06/14/16
3	5	06/14/16
4	6	01/03/17
5	3	03/07/16
6	6	06/14/16
7	8	01/03/17
8	5	03/07/16
9	4	06/14/16
FRONT COVER	12	01/03/17
REAR COVER	12	01/03/17

NOTE

To verify the latest revision of the POH compare the rev level found on the cover page with the latest revision posted on the RV-12 Service Information page of the Van's Aircraft web site. The overall rev level changes with any change within the document.

TABLE OF CONTENTS

NOTE

Pages 3-5, 7-9 & 7-10 correspond to a particular EFIS installation. Please remove all pages that do not correspond to your EFIS. Specific EFIS type is noted next to the page number.

Pages 2-7 and 2-8 correspond to ELSA or SLSA aircraft. Please remove the pages that do not correspond to your particular aircraft.

INTRODUCTION

The aircraft is compliant with the following ASTM standards

Design	F 2245
Construction	F 2563
Continued Airworthiness	F 2295
Pilot Operating Handbook	F 2746

Manufacturer Contact Information

For an SLSA Aircraft
Van's Aircraft, Inc.
14401 Keil Rd NE
Aurora, Oregon 97002
Phone: 503-678-6545

Data Location and Contact

Should Van's Aircraft Inc. lose its ability to support the RV-12, see data location and contact information for recovery of certification documentation below:
Synergy Air
90451 Boeing Drive
Eugene, OR 97402
Requests will only be processed if
Van's Aircraft Inc. is no longer in operation.

SECTION 1

GENERAL INFORMATION

INDEX

GENERAL INFORMATION

This manual has been prepared to inform the pilot of the features and systems incorporated in the RV-12. Recommended operating procedures and performance data are provided so that maximum utilization can be obtained with the utmost of safety, economy, and serviceability. A companion manual, the RV-12 Flight Training Supplement, mirrors the content of this manual but presents operating procedures at a greater level of detail than can effectively be presented in this manual.

It is strongly recommended that the pilot be familiar with the aircraft, the RV-12 FTS, and this manual prior to flight.

The words “WARNING”, “CAUTION”, and “NOTE” are used throughout the manual with the following definitions:

WARNING
An operating procedure, practice, or condition, etc. which may result in injury or fatality if not carefully observed or followed.

CAUTION
An operating procedure, practice, or condition, etc. which if not strictly observed may damage the aircraft or equipment.

NOTE
An operating procedure, practice, or condition, etc.

SUMMARY OF PERFORMANCE SPECIFICATIONS

Gross Weight	1320 lb
Top Speed (@ gross weight)	117 KIAS
Cruise (@ gross weight, 5500rpm)	114 KIAS
Range (@ gross weight , 5500rpm, 7500ft, 30 min reserve)	425 nm
Rate of Climb (@ gross weight, V_Y 75 KCAS, sea level)	906ft/min
Stall Flaps Down @ gross weight, V_{SO}	41 KIAS
Stall @ gross weight, V_S	45 KIAS
Total Fuel Capacity	19.8 US Gallons

Total Unusable Fuel (See Warning on page 2-6)
- Shallow Climbs, Level or Descending Flight: 0 US Gallons
- Vx Climb: 3 US Gallons
- Climbs: 4 US Gallons

Approved Fuel Types 100 LL Aviation Fuel or
91 AKI Premium Unleaded Automotive

Maximum Engine Power 100 Hp @ 5800 (5 minutes maximum)

SECTION 2

OPERATING LIMITATIONS

INDEX

GENERAL

This section lists all power plant and airframe operating limitations. These limitations are also indicated in the aircraft in the form of placards, instrument color markings, and audio warnings. The aircraft placards, instrument color markings, and audio warnings are to be the authority if an inconsistency exists with this manual.

WARNING
All operating limitations must be strictly adhered to for reasons of safety and serviceability.

FLIGHT OPERATIONS

The RV-12 is designed for operation in the Light Sport Category.

Daytime flight in VFR conditions only is approved providing that the aircraft is operating as specified under Part 91 of the Federal Air Regulations (F.A.R.'s).

WARNING
Night flight is prohibited
(Unless equipped with optional lighting).

WARNING
Flight in IFR/IMC conditions is prohibited.

WARNING
Flight into known icing conditions is prohibited.

AIRSPEED LIMITATIONS

AIRSPEED DESIGNATION	KIAS
Stall Flaps Down at gross weight 1320 lbs $\mathbf{V_{SO}}$	41
Stall at gross weight 1320 lbs $\mathbf{V_S}$	45
Flap Operating Range $\mathbf{V_{SO} - V_{FE}}$	41-82
Normal Operating Range **green arc**	45-108
Operating Maneuvering $\mathbf{V_O}$ 1320 lbs.	90
Operating Maneuvering $\mathbf{V_O}$ 850 lbs.	72
Maximum Structural Cruise $\mathbf{V_{NO}}$	108
Caution Range **yellow arc**	108-136
Maximum Direct Crosswind Component	11
Maximum Wind Limitation	30
Never Exceed $\mathbf{V_{NE}}$ **red line** below 16,000 feet	136

AIRSPEED DESIGNATION	KTAS
Never Exceed $\mathbf{V_{NE}}$ **red line**	136

NOTE

KCAS	Knots Calibrated airspeed is indicated airspeed (IAS) corrected for installation and instrument error.
KIAS	Knots Indicated airspeed assumes zero instrument error only.
KTAS	Knots speed of the aircraft relative to the air mass in which it is flying.
V_{NE}	Maximum safe airspeed, not to be exceeded at any time.
V_{NO}	Not to be exceeded except in smooth air only and then with caution.
V_{FE}	Not to be exceeded with flaps extended.
V_O (V_A)	No full or abrupt control movements allowed above this airspeed.

CEILING

Service Ceiling Estimated 12,000 ft

FLIGHT LOAD FACTORS

Category	Limit Load Factor
Light Sport Category	+4.0g/-2.0g

PROHIBITED MANEUVERS

AEROBATICS PROHIBITED!
Intentional spinning prohibited

POWERPLANT LIMITATIONS

Tachometer

Caution Range (yellow arc)	1400 to 1800 RPM
Normal Range (green arc)	1800 to 5500 RPM
Caution Range (yellow arc)	5500 to 5800 RPM
Maximum (red line)	5800 RPM

Coolant/Cylinder Head Temperature*

Normal in Cruise (green arc)	150° to 230° F
Caution Range (yellow arc)	230° to 248° F
Maximum (red line)	248° F

Oil Temperature

Minimum	120° F
Normal in Cruise	190° to 230° F
Caution Range (yellow arc)	230° F to 248° F
Maximum (red line)	248° F

Oil Pressure

Minimum at Cruise	29 psi
Maximum at Cruise	73 psi
Maximum – Cold (red line)	100 psi
Minimum at Idle (red line)	12 psi

Exhaust Gas Temperature

Maximum Cruise	1560°F
Maximum Take-Off	1616° F

***NOTE**

All engines with new cylinder heads
(Part number 413185/413195 per Rotax SB 912-066UL)
are equipped with sensors that measure coolant temperature.
Older cylinders measured cylinder head temperature.
The EFIS label for new cylinders will continue to be “CHT” even though indications marked CHT measure Coolant Temperature.

FUEL LIMITATIONS

Fuel Pressure (using engine driven pump 893110, 893114, or 893115)

Normal Range	2.2 to 7.2 psi
Maximum (red line)	7.2 psi
Minimum (red line)	2.2 psi

Fuel Pressure (using engine driven pump other than 893110, 893114, or 893115)

Normal Range	2.2 to 5.8 psi
Maximum (red line)	5.8 psi
Minimum (red line)	2.2 psi

Fuel Type 100 LL Aviation Fuel
or (91 AKI) Premium
Unleaded Automotive
Capacity 19.8 US Gallons

Unusable Fuel

Shallow Climbs, Level or Descending: **0 US Gallons**
Vx Climb: **3 US Gallons**
Climbs: **4 US Gallons**

WARNING

When the fuel level is less than 4 US Gallons, extreme caution should be used during climbs to ensure that the tank outlet remains submerged. Prolonged high pitch angles (greater than 8 deg nose up), may result in fuel starvation and engine stoppage.

AIRSPEED/POWERPLANT INDICATOR MARKINGS

Limitations are displayed electronically.

OPERATING LIMITATIONS

Limitations are displayed electronically.

PASSENGER WARNING

Displayed on instrument panel

“THIS AIRCRAFT IS AN EXPERIMENTAL AIRCRAFT AND DOES NOT COMPLY WITH FEDERAL SAFETY REGULATIONS FOR STANDARD AIRCRAFT" NO INTENTIONAL SPINS”

WARNING

FLIGHT INTO IMC IS PROHIBITED

MISCELLANEOUS PLACARDS

- Registration number on outside of aircraft, 2 places
- Stainless steel data plate on outside of aircraft
- Registration number on instrument panel
- EXPERIMENTAL placard on baggage bulkhead
- Instrument panel switches and fuses are all labeled
- OPEN placard (near canopy latch on outside of rear window)
- Fuel type and capacity placard (near fuel cap)
- THROTTLE above throttle knob, PUSH OPEN on knob
- CABIN HEAT above cabin heat knob, PULL ON on knob
- PULL ON & ROTATE TO LOCK below choke control
- Fuel valve on/off placard adjacent to fuel valve
- Baggage capacity maximum 50 lb on baggage bulkhead
- No Push placards (2 places) on anti-servo tab
- Autopilot disconnect adjacent to switch (If optional Autopilot installed)
- 12 Volt Power Outlet 5A max adjacent to power outlet
- Music Input adjacent to receptacle
- ELT label adjacent to instrument panel switch
- Spare fuse holder fuse positions labeled

AIRSPEED/POWERPLANT INDICATOR MARKINGS

Limitations are displayed electronically.

OPERATING LIMITATIONS

Limitations are displayed electronically.

PASSENGER WARNING

Displayed on instrument panel

"THIS AIRCRAFT WAS MANUFACTURED IN ACCORDANCE WITH LIGHT SPORT AIRCRAFT AIRWORTHINESS STANDARDS AND DOES NOT CONFORM TO STANDARD CATEGORY AIRWORTHINESS REQUIREMENTS NO INTENTIONAL SPINS"

WARNING

FLIGHT INTO IMC IS PROHIBITED

MISCELLANEOUS PLACARDS

- Registration number on outside of aircraft, 2 places
- Stainless steel data plate on outside of aircraft
- Registration number on instrument panel
- LIGHT-SPORT placard on baggage bulkhead
- Instrument panel switches and fuses are all labeled
- OPEN placard (near canopy latch on outside of rear window)
- Fuel type and capacity placard (near fuel cap)
- THROTTLE above throttle knob, PUSH OPEN on knob
- CABIN HEAT above cabin heat knob, PULL ON on knob
- PULL ON & ROTATE TO LOCK below choke control
- Fuel valve on/off placard adjacent to fuel valve
- Baggage capacity maximum 50 lb on baggage bulkhead
- No Push placards (2 places) on anti-servo tab
- Autopilot disconnect adjacent to switch (If optional Autopilot installed)
- 12 Volt Power Outlet 5A max adjacent to power outlet
- Music Input adjacent to receptacle
- ELT label adjacent to instrument panel switch
- Spare fuse holder fuse positions labeled

SECTION 3

EMERGENCY PROCEDURES

INDEX

GENERAL

This section covers the recommended procedures to follow during emergency and adverse flight conditions. As it is not possible to define every type of emergency that may occur, it is the pilot's responsibility to use sound judgment based on personal experience and knowledge of the aircraft to determine the best course of action.

It is considered mandatory that the pilot be familiar with this entire manual, in particular, the "Emergency Procedures" section prior to flight.

WARNING
Do not turn off the Master switch with the engine running except in an EMERGENCY situation.
Running the engine with the Master Switch off may damage the voltage regulator.

NOTE
All airspeeds in this section are indicated knots airspeeds (KIAS) unless stated otherwise.

FIRE

ENGINE FIRE DURING START

If the fire is believed to be confined to the intake or exhaust system (result of flooding engine):

- Continue cranking engine with starter
- Choke – PUSH OFF
- Throttle – FULL OPEN
- Fuel Shut-Off Valve – PULL UP-OFF
- Inspect aircraft thoroughly for damage and cause prior to restart

If fire persists or is not limited to intake or exhaust system:

- Fuel Shut-Off Valve – PULL UP-OFF
- Electrical and Ignition Switches – ALL OFF
- Evacuate Aircraft immediately
- If available, direct fire extinguisher through the air outlet tunnel at the bottom of the cowl

ENGINE FIRE IN FLIGHT

- Fuel Shut-Off Valve – PULL UP-OFF
- Ignition Switches – BOTH OFF
- Air Vents and Cabin Heat – BOTH CLOSED
- Airspeed - INCREASE glide speed to find an airspeed which will provide an incombustible mixture without exceeding **Vne**. (**Vno** if turbulence exists)
- Consider Side slip to divert smoke from pilot side
- Follow “Forced Landing Procedure” on page12
- MAYDAY 121.5 MHz (or frequency in use)

WARNING
Do not attempt to restart engine.

Before Touchdown
- Master Switch – OFF
- Airspeed – 60 KIAS (55 KIAS minimum)
- Flaps – DOWN after intended point of landing assured.

Touchdown with minimum airspeed particularly if landing on rough terrain.

ELECTRICAL FIRE

An electrical fire is usually indicated by an odor of hot or burning insulation.

- Electrical Switches – ALL OFF (leave Ignition Switches – ON)
- Air Vent – OPEN if necessary for smoke removal and ventilation
- Use hand fire extinguisher if available
- Land immediately (or as soon as practical if location for safe landing is not available)

GENERATOR/ELECTRICAL FAILURE

WARNING

Electrical fuel pump operation depends upon sufficient battery power. Monitor the fuel pressure provided by the mechanical engine driven pump if the electrical pump has been shut off using the master switch or fuel pump fuse.

Stabilator trim operation depends on battery power.

LOW VOLTAGE/DISCHARGE

A generator failure is indicated by a steady discharge on the ammeter and voltage indication less than 12.0 volts.

- Non-Essential Electrical Equipment - OFF
- Avionics Switch – OFF (the EFIS and GPS will continue to operate on the EFIS backup battery)
- Land as soon as possible as the battery and EFIS backup battery will furnish electrical power for a limited time only.

HIGH VOLTAGE

A voltage in excess of 15 volts indicates a runaway generator.

- Master - OFF
- 30A Main Bus Fuse – PULL-REMOVE immediately
- Non-Essential Electrical Equipment - OFF
- Avionics Switch – OFF (the EFIS and GPS will continue to operate on the EFIS backup battery)
- Land as soon as possible as the battery will furnish electrical power for a limited time only.

THIS PAGE INTENTIONALLY LEFT BLANK

GENERATOR/ELECTRICAL FAILURE

WARNING

Electrical fuel pump operation depends upon sufficient battery power. Monitor the fuel pressure provided by the mechanical engine driven pump if the electrical pump has been shut off using the master switch or fuel pump fuse. Stabilator trim operation depends on battery power

LOW VOLTAGE/DISCHARGE

A generator failure is indicated by a steady discharge on the ammeter and voltage indication less than 12.0 volts.

- Non-Essential Electrical Equipment - OFF
- Land as soon as possible as the battery and EFIS backup battery will furnish electrical power for a limited time only.

HIGH VOLTAGE

A voltage in excess of 15 volts indicates a runaway generator.

- 30A Main Bus Fuse – PULL-REMOVE immediately
- Non-Essential Electrical Equipment - OFF
- Land as soon as possible as the battery and EFIS backup battery will furnish electrical power for a limited time only.

THIS PAGE INTENTIONALLY LEFT BLANK

ENGINE MALFUNCTION

ENGINE FAILURE ON TAKE-OFF

WARNING

In the event of engine failure after airborne, the control stick must be IMMEDIATELY moved forward to prevent loss of airspeed.

Sufficient runway remains for landing

- Airspeed – 60 KIAS (55 KIAS minimum)
- Throttle – CLOSED
- Land using maximum braking after touchdown.

If airborne and insufficient runway remains for landing, attempt an engine restart if altitude permits:

- Fuel Shut-Off Valve – CHECK ON - DOWN
- Choke – CHECK OPEN - PUSH
- Ignition Switches – BOTH ON
- Fuel Pump - CHECK FUSE (illuminated if blown)

If no restart is possible:

- Select most favorable landing area ahead
- Flaps – FULL DOWN
- Fuel Shut-Off Valve – OFF
- Ignition Switches – BOTH OFF

WARNING

Maintain flying speed at all times and do not attempt to turn back toward the runway unless sufficient altitude has been achieved.

- Master switch - OFF
- Touchdown with minimum airspeed particularly if landing on rough terrain.

ENGINE AIR RESTART

- Maintain Airspeed – 60 KIAS (55 KIAS minimum)
- Ignition Switches – BOTH ON
- Fuel Pump – CHECK FUSE (illuminated if blown)
- Fuel Shut-Off Valve – CHECK ON - DOWN
- Choke – CHECK OPEN - PUSH
- If restart not possible, change throttle and/or choke settings in attempt to restart
- Follow “Forced Landing Procedure” if unable to restart

NOTE

The engine starter may be engaged in flight should the propeller stop wind milling.
Propeller will not windmill below 80 KIAS.

PARTIAL POWER LOSS/ROUGH RUNNING

- Follow the engine air restart procedures
- Land as soon as possible using “Precautionary Landing Approach” procedures

ABNORMAL OIL PRESSURE/TEMPERATURE INDICATIONS

- RPM - reduce to MINIMUM NECESSARY.
- Perform precautionary landing as soon as able.

Oil pressure and temperature problems are usually related with one affecting the other. Before any drastic action is taken, cross check other engine instruments and control settings in an attempt to determine the source of the problem.

High oil temperature is generally a result of loss of oil or overheating (note CHT). If the situation remains unchecked, oil pressure usually drops resulting in possible engine damage. Power should be reduced to the minimum necessary; land as soon as practical.

Little or no oil pressure is usually caused by a failed pressure relief valve, pump, loss of oil, high oil temperature or a defective gauge. A landing should be made as soon as practical using minimum RPM. Plan a “Precautionary Landing Approach” as complete engine failure is possible at any time.

High oil pressure is admissible for a short period at cold start. Should high oil pressure occur in flight reduce power to the minimum necessary; land as soon as practical.

NOTE (D-180 Only)

Zero oil pressure will be indicated if main bus power is removed.

THIS PAGE INTENTIONALLY LEFT BLANK

EMERGENCY LANDING

PRECAUTIONARY LANDING APPROACH

A precautionary landing approach should be used whenever power is still available but a complete power failure is considered imminent. Maintain a higher and closer pattern than normal in attempt to remain in gliding distance of the intended touchdown point. Use the normal landing procedures in addition:

- Airspeed – 60 KIAS recommended (55 KIAS minimum)
- Throttle – CLOSED when in gliding distance of runway
- Flaps – LOWER AS NEEDED to increase approach descent angle

NOTE

Slipping the aircraft by cross controlling the rudder and ailerons will increase the rate of descent both with and without flaps. If a crosswind exists, place the lower wing into the wind.

FORCED LANDING (Complete Power Failure)

If the engine cannot be restarted in flight, trim the aircraft to the recommended glide speed. Remain within gliding distance of the intended point of landing. Maintain a higher and closer pattern than normal making allowance for wind.

Extending flaps or slipping the aircraft can lose additional altitude. Diving the aircraft in an attempt to lose altitude when flying into a headwind will only increase the required landing distance.

- Airspeed for maximum gliding distance – **63 KIAS**
  Minimum rate of descent airspeed- **59 KIAS**
- Fuel Shut-Off Valve — PULL UP-OFF
- Flaps – UP to maximize glide range
- Radio – MAYDAY 121.5 MHz (or frequency in use)
- Transponder – 7700.
- Attempt to position the aircraft approximately 1000 feet above ground level (AGL) when on downwind and abeam the intended point of landing.
- Ignition Switches – BOTH OFF
- Final Approach
  a) Airspeed – 55-60 KIAS
  b) Flaps – DOWN when intended point of landing assured
- Master Switch – OFF

Touchdown with minimum airspeed particularly if landing on rough terrain.

DITCHING

Should it become necessary to make a forced landing over water.

- INTO WIND landing if high winds are evident
- PARALLEL to SWELLS with calm winds
- Airspeed for maximum gliding distance – **63 KIAS**
  Minimum rate of descent airspeed- **59 KIAS**
- Fuel Shut-Off Valve — PULL UP-OFF
- Flaps – UP
- Radio – MAYDAY 121.5 MHz
- Transponder – 7700.
- Ignition Switches – BOTH OFF
- Flaps – UP (allows NOSE HIGH attitude)
- Canopy – UNLATCH (just before touchdown)
- Contact the water with a NOSE HIGH attitude
- After coming to complete stop – EXIT AIRCRAFT

NOTE

Aircraft cannot be depended upon to provide flotation after contacting the water.

UNUSUAL FLIGHT CONDITIONS

SEVERE TURBULENCE

To prevent overstressing the aircraft do not exceed 108 KIAS in rough air. To minimize personal discomfort, decrease the airspeed below 90 KIAS. Maintain a level flight attitude rather than flying by reference to the EFIS as the pitot-static indications may become very erratic.

STALLS

The RV-12 stall characteristics are conventional. Additionally, the RV-12 is equipped with a vane-type stall warning buzzer that activates approximately 7 KTS above stall speed.

Aileron control response in a fully stalled condition is marginal. Large aileron deflections will aggravate a near stalled condition and their use is not recommended to maintain lateral control. The rudder is very effective and should be used for maintaining lateral control in a stalled condition with the ailerons placed in a neutral position.

To recover from a stall, proceed as follows:

- Stabilator– relax back pressure on control stick.
- Throttle – FULL OPEN simultaneously with relaxation of back pressure on stick.
- Rudder - Use to maintain lateral control.

SPINS

If a spin is inadvertently entered, immediate recovery should be initiated. The recovery procedure is as follows:

- Throttle – CLOSED
- Rudder – FULL OPPOSITE direction of rotation
- Sabilator – SLIGHTLY FORWARD OF NEUTRAL
- Aileron – NEUTRAL POSITION
- Flaps – UP

When rotation stops (1/2 – 1 turn after recovery initiated)

- Rudder – NEUTRALIZE
- Nose Attitude – RAISE NOSE SMOOTHLY to level flight attitude

WARNING
During the spin recovery, the airspeed will build very rapidly with a nose low attitude.
Do not use full or abrupt stabilator control movements.

RUNAWAY TRIM MOTOR

If the trim motor should begin to run un-commanded in one or the other direction the following actions should be taken:

- Trim Fuse – PULL-REMOVE immediately
- Autopilot Switch (G3X Only) - OFF
- Stabilator - HOLD against out of trim condition
- Airspeed – REDUCE to lessen the amount of force required
- Land as soon as practicable
- Flaps – UP for landing to minimize pitch forces

LOSS OF TRIM TAB

A disconnected anti-servo tab implies lost trim and anti-servo function

- Airspeed - REDUCE to minimize flutter
- Control Stick - firm grip to prevent un-commanded pitch excursions.
- Land as soon as possible.

EMERGENCY DESCENT

If the need for an immediate descent to a lower altitude due to a smoke, pilot/passenger illness or other un-usual situation, perform an emergency descent mindful of airspeeds and load factors.

- Throttle - CLOSED
- Control Stick - BANK 30° TO 45° to maintain positive load factor
- Airspeed – Increase without exceeding **Vne**. (**Vno** if turbulence exists)
- Do not exceed 82 KIAS if flaps are extended.
- Throttle - CLEAR the engine every 1000’ with a short application of power.

LOSS OF FLIGHT INSTRUMENTS (EFIS)

Electronic Flight Information systems are subject to complete or partial failure due to electrical system, AHRS/ADC, GPS module or software failures. If an aircraft system electrical failure occurs, the internal back up battery will furnish electrical power for a limited time only.

In the event of a complete loss of display information, fly the airplane to the nearest suitable airport using the present power settings and normal maneuvers.

Stall Warning aural warnings will remain functional with the Master and Avionics Switches - ON.

- Throttle - Based on throttle positions and engine noise
- Nose Attitude - Slightly below horizon

EFIS REBOOT PROCEDURE

DYNON SKYVIEW
- Buttons 1,2,5 -- PRESS simultaneously

GARMIN G3X
- Master Switch -- Turn OFF then ON

IN-FLIGHT OVERSTRESS

Should an overstress occur due to exceeding the airspeed or load factor limits, aggressive maneuvering should be terminated immediately.
DO NOT under any circumstances make large control movements or subject the aircraft to additional G loadings above that required for straight and level flight

- Throttle – REDUCE
- Airspeed – 65–75 KIAS
- Flaps – UP
- Land as soon as practical

After landing, the aircraft should be inspected prior to the next flight.

UNINTENTIONAL FLIGHT INTO ICING

- Leave the icing area (by changing altitude, course or both, in order to reach zones with a higher ambient temperature).
- Cabin Heat – ON
- Autopilot Switch – OFF
- RPM – INCREASE in order to prevent ice build-up on the propeller blades
- Flaps – LEAVE RETRACTED
- ATC – ADVISE

CAUTION

Ice build-up increases the stalling speed. Carry extra speed on landing approach. The stall warning horn may not function.

LOSS OF FLIGHT CONTROLS

LOSS OF STABILATOR CONTROL

- Trim – Use as required for pitch control – slow response
- Flap – Will provide rapid pitch input (control response will be in reverse of control stick commands. Pulling up (back) on the flap handle will pitch the nose down). A high level of concentration is necessary to use flaps as pitch control.
- Throttle – INCREASE for nose-up pitch response, REDUCE for nose-down pitch response.

Control Lost One Direction - Use trim and opposing pitch input.

Control Locked – Use flap and trim (will function as an elevator and opposite of normal).

Free Floating – Use trim control to maintain pitch attitude.

Find a suitable airport with a long, wide runway aligned with the wind direction if available

- Throttle – REDUCE
- Airspeed – 75 KIAS
- Flaps – 1st position
- Airspeed – Trim to 60 KIAS
- Establish a long, shallow final approach to the runway
- Throttle - CHANGE TO CONTROL GLIDE PATH
- Short Final - Airspeed – using Trim and Throttle 50 KIAS
- Touchdown use power and/or trim to decrease the rate of descent.

NOTE

Flaps in first position allow more nose wheel clearance at touchdown than full flap position.

In the event of a go around, advance the throttle slowly to avoid a sudden pitch up tendency.

LOSS OF AILERON ROLL CONTROL

- Rudder – Yaw changes will have a secondary affect as low rate roll control.
- Autopilot – Depending where the failure occurred the autopilot may be used to control roll.

Find a suitable airport with a long, wide runway aligned with the wind direction if available**.** To avoid a cross control stall maintain an airspeed 10 KIAS above normal.

LOSS OF FLAP CONTROL

Maintain an airspeed 5 KIAS above normal. Landing distance will be increased.

LOSS OF RUDDER CONTROL

Find a suitable airport with a long, wide runway aligned with the wind direction if available**.** If control has failed in one direction (most common failure) land such that the controlled direction opposes any crosswind component. To avoid a cross control stall maintain an airspeed 10 KIAS above normal. Touchdown at minimum speed. After touchdown shut off engine to minimize idle thrust.

LOSS OF BRAKE

If discovered upon touchdown go around to consider the options below.

- Find a suitable airport with a long, wide runway.
- Select a runway with a cross wind from the inoperative brake side.
- Touchdown at minimum speed.
- After touchdown oppose the weathervane effect with the operating brake. If no cross wind exists use aerodynamic rudder control to steer towards the inoperative brake side of the runway.
- Once aerodynamic rudder control becomes ineffective, shut off the engine to minimize idle thrust.
- Keep as much of the runway width available on the side of the operative brake for roll out or a hard-braking turn to a full stop.

THIS PAGE INTENTIONALLY LEFT BLANK

SECTION 4

NORMAL OPERATING PROCEDURES

INDEX

GENERAL

This section covers all recommended normal operating procedures using a checklist format whenever possible with additional information if further explanation is required.

NOTE

All recommended airspeeds in this section are KNOTS INDICATED AIRSPEEDS (KIAS) with the aircraft loaded to the maximum gross weight of 1320 lb.

PREFLIGHT INSPECTION

Cabin

- Canopy – OPEN check condition, operation
- Flight Control Locks - REMOVE
- Fuel tank – CHECK FUEL LEVEL on Mechanical Fuel Gauge (no take-off with less than 4 gallons fuel)
- Master switch – ON
- Stall warning vane – ACTUATE
- Stall warning horn – ON when vane is actuated
- Gascolator – DRAIN fuel sample, CHECK for leakage
- Fuel Sample – CHECK for water or sediment contamination with fuel pump ON.

WARNING
During high ambient temperature conditions, run the fuel pump for 5 mins to flush the fuel lines and minimize the potential for vapor lock

- Lights / Strobes – CHECK then OFF
- Master switch – OFF
- ELT – OFF
- Baggage – RESTRAINED
- Foreign or Misplaced Objects - CHECK

Left Main Landing Gear

- Tire – CONDITION, proper inflation 25psi
- Brake – CHECK condition, no leakage
- Axle Nut – CHECK cotter pin installation
- Wheel Bearings – SHAKE WHEEL - CHECK
- Wheel Chocks – REMOVE

Left Wing

- Wing – CONDITION
- Wing Hand Hold – CHECK no free movement*
- Tie-Down – REMOVE eyelet
- AOA static port – check for obstructions
- Flaperon – CHECK condition, freedom of movement
- Flaperon Hinge Brackets - BOLTS – CHECK

*** WARNING:** When applying Fore and Aft force check for play at the rear spar junction. This is usually discovered by hearing a clicking noise. If this is the case refer to the Maintenance Manual for corrective action.
Excessive fore and aft play in the left wing, will also render the EFIS **AOA indications inaccurate.**

Fuselage (Left Side)

- Controls – CONNECTED
- Static Port – CLEAN & OPEN

Empennage

- Vertical Stabilizer – CHECK condition
- Stabilator – CHECK condition, freedom of movement
- Anti-Servo Tab – CHECK condition, proper attachment
- Rudder – CHECK condition, proper attachment, freedom of movement
- Tie-Down – UNTIE RESTRAINT from eyelet

Fuselage (Right Side)

- Static Port – CLEAN & OPEN
- Comm. Antenna -CHECK condition & security
- Fuel Vent Lines - CLEAR
- Fuel Cap – SECURE & VENT OPEN
- Controls - CONNECTED

Right Wing

- Flaperon – CHECK condition, freedom of movement
- Flaperon Hinge Brackets - BOLTS - CHECK
- Wing – CONDITION
- Tie-Down – REMOVE eyelet

Right Main Landing Gear

- Tire – CONDITION, proper inflation 25psi
- Brake – CHECK condition, no leakage
- Axle Nut – CHECK cotter pin installation
- Wheel Bearings – SHAKE WHEEL - CHECK
- Wheel Chocks – REMOVE

Nose Section

- Transponder Antenna – CHECK condition & security
- Muffler – CHECK condition, security of attachment
- Cowl Door - OPEN
- Coolant – LEVEL CHECK
- Engine Oil – CHECK quantity, color, and clarity

WARNING
Before performing the engine oil check procedure, make sure the master and both ignition switches are at the OFF position.

1. Remove oil cap from tank cover.
2. Turn propeller by hand in direction of propeller rotation several times to pump oil from engine into oil tank.
3. A gurgling sound will be heard.
4. Check oil level on stick
5. Replace the cap from the oil tank.

ALTERNATIVE TO STEP 2:

1. Remove oil cap from tank cover.
2. OIL minimum quantity at or above tip of dipstick
3. MASTER ON
4. Ignitions A OFF- B OFF
5. Use the start key to turn the propeller for 10 seconds
6. MASTER OFF
7. Check the oil level

- Nose Landing Gear – CHECK attachment to fuselage
- Tire – CONDITION, proper inflation 22psi
- Tow Bar disconnected and stowed
- Wheel Chocks - REMOVE
- Cowling – CHECK condition, all screws properly installed
- Right Air Inlet – CHECK unobstructed
- Propeller and Spinner – CHECK condition, security
- Pitot – CLEAN & OPEN
- Left Air Inlet – CHECK unobstructed
- Oil & Coolant Air Duct – CHECK unobstructed
- Cowl Door – CLOSED

PRE-START

- EFIS - POWER-UP (D-180/SkyView) by holding left button depressed until screen flashes white then release button.
- Passenger Briefing – PERFORM**
- Safety Belts – FASTENED & SNUG
- Canopy – CLOSED and LATCHED
- Fuel Valve – OPEN (push down)
- Throttle – ADJUST FRICTION

- Master – ON
- Ignition – BOTH ON
- Anti-Collision Light - ON

**14 CFR 91.327(e) Each person operating an aircraft issued a special airworthiness certificate in the light-sport category must advise each person carried of the special nature of the aircraft and that the aircraft does not meet the airworthiness requirements for an aircraft issued a standard airworthiness certificate.

ENGINE START

CAUTION

Do not start engine with outside air temperature below -13° F (-25° C) or above 120° F (50° C).

- Fuel Pressure – NORMAL
- Throttle – Cold Start – FULLY CLOSED
  Warm Start – 1/8 in OPEN
- Choke – Cold Start–PULL OUT– HOLD
  Warm Start – OFF
- Brakes – HOLD
- Propeller – CLEAR
- Ignition Key – ENGAGE
- Throttle/Choke – 2000 RPM
- Oil Pressure – CHECK 12 psi within 10 seconds or immediately shutdown the engine
- Ammeter – CHARGING
- Choke – OFF
- Avionics Switch – ON
- Autopilot Switch – ON

CAUTION

Limit the use of the starter to 10 seconds duration maximum with a two minute cooling off period between each starter engagement.

TAXIING

Taxi operations during high winds require the conventional use of the flight controls. With a head wind or quartering head wind, place the control stick full aft and into the wind. With a tail wind or quartering tail wind, use the opposite procedures. The use of the wheel brakes in conjunction with the rudder will assist the pilot in maintaining directional control.

- Engine Gauges – CHECK
- Brakes – RELEASE
- Taxi RPM – 1800–2500 RPM until oil temp reaches 120° F (50° C)
- Flight Instruments – VERIFY proper indications.

BEFORE TAKEOFF RUN UP

- Brakes – HOLD
- Flight Controls – CHECK
- Flight Instruments – CHECK & SET
- Fuel Valve – CHECK OPEN
- Fuel Quantity Indication - CHECK (no take-off with less than 4 gallons fuel)
- Trim – SET for takeoff
- Flaps – SET 1st DETENT
- Canopy – CHECK Latched
- Engine Run-Up
  - Minimum Oil Temp 120° F
  - Stabilator – STICK BACK
  - Throttle – 4000 RPM
  - Ignition – Cycle A – B- BOTH ON
    - (max RPM drop - 300)
    - (max diff – 115)
  - Engine Instruments – CHECK
    - Normal Indications
  - Ammeter – CHECK
  - Throttle – IDLE
- Fuses – CHECK
- Fuel Pressure – NORMAL
- Seat Belt, Pilot and Passenger – FASTENED & SNUG
- Take OFF briefing and Abort Plan. REVIEW
- Brakes – RELEASE

NOTE

Higher RPM will heat the oil more rapidly.

Especially on hot days CHT can rise significantly if RPM is low. High power operation (above 3000 RPM) and engine run-up should be made into the wind and kept to a minimum during high temperature conditions.

TAKE-OFF (Normal)

- Control Stick – half way between neutral and aft
- Throttle – smoothly FULL OPEN
- Stabilator Control – hold back pressure on control to RAISE NOSE just clear of ground, release as needed.
- Lift Off - 50-55 KIAS
- Climb – 75 KIAS (Vy)
- Flaps – UP
- Trim – AS REQUIRED to hold desired airspeed

During crosswind conditions, place the control stick into the wind (up wind aileron UP) and raise the nose just clear of the ground as early in the take-off roll as possible to improve rudder authority and prevent drifting or premature lift-off. When taking off with a left crosswind and full power, right rudder is a limiting factor.

TAKE-OFF (Obstacle)

During an obstacle take-off, use the normal take-off procedures with the following exceptions:

- Flaps – 1st DETENT
- Brakes – HOLD until application of full power
- Lift –Off – 50 to 55 KIAS
- Climb – 60 KIAS (Vx) until clear of obstacle

TAKE-OFF (Soft Field)

For soft field take-off, use the normal take-off procedures with the following exceptions:

- Flaps – 1st DETENT
- Stabilator Control – hold back pressure on control to RAISE NOSE slightly higher than used for a normal takeoff.
- After Lift-Off – LEVEL FLIGHT to obtain safe margin of airspeed prior to climb (Vx or Vy)

WARNING
The aircraft will lift-off at very low IAS but continued climb-out below 60 KIAS immediately after take-off is not recommended.

CLIMB

- Throttle – FULL
  5800 RPM Max 5 minutes
  5500 RPM Max Continuous
- Airspeed –
  Best Rate 75 KIAS
  Flaps – UP
  Best Angle 60 KIAS
  Flaps – 1st DETENT
  Cruise-Climb 85 KIAS
  Flaps – UP
- Engine Gauges – CHECK
- Trim – as required to hold desired airspeed

CRUISE

- Level-Off – ACCELERATE to desired cruise airspeed
- Flaps – CHECK UP
- Throttle – SET RPM to cruise power (5500 RPM Max)
- Trim – AS REQUIRED
- Engine Gauges – CHECK

DESCENT & APPROACH

- Throttle – REDUCE
- Flight Instruments - ADJUST
- Airspeed – AS DESIRED
- Engine Gauges – MONITOR
- Flaps – UP (above 82 KIAS)
  AS DESIRED (below 82 KIAS)

The descent should be made with enough power to maintain cylinder head and oil temperatures in green arc. If possible, avoid wind milling the engine with the propeller by reducing airspeed or increasing power.

When planning a descent from cruise altitude to the airport traffic pattern, use time to destination to calculate a realist and comfortable rate (500ft/min).

When available, use the Vertical navigation (VNAV) function of the EFIS to perform a stable descent if terrain, airspace and/or weather permit.

LANDING

- Seat Belt – Pilot and Passenger – FASTENED & SNUG
- Brakes – CHECK firm then release
- Ignition Switches – BOTH ON
- Flaps – AS DESIRED (below 82 KIAS)
- Trim - AS REQUIRED
- Airspeed – 55-60 KIAS
- Throttle – AS DESIRED to control rate of descent
- Touchdown - MAIN WHEELS FIRST
- After Touch Down –
  - Stabilator Control – FULL AFT
  - Brake as Required

The best technique for use on soft or rough fields is to fly the landing approach at minimum speed carrying power into the landing flare and using an extreme nose high landing attitude so as to touch down with minimum airspeed.

During gusty wind conditions, fly the landing approach at approximately 5 kts above normal and touch down with the nose slightly lower than for a normal landing.

Crosswind approaches can best be accomplished by using the wing down top rudder method touching first on the down wing side main wheel, followed by the other main wheel, and finally lowering the nose wheel all the while keeping the stick into the wind.

LANDING (Obstacle)

Use of normal landing procedures in addition:

- Flaps – FULL DOWN
- Airspeed – 55 KIAS
- Throttle – AS REQUIRED to control rate of descent
- Slip aircraft as necessary to increase rate of descent

WARNING
A relatively high rate of descent is possible in this configuration when at full gross weight and the throttle closed. If airspeed is allowed to decrease below 55 kts, level off can only be assured with an application of power.

LANDING (Balked)

Use of normal landing procedures in addition at the time of going around:

- Throttle – FULL OPEN
- Flaps – 1st DETENT
- Airspeed –
  - Best Angle 60 KIAS
    - Flaps – 1st DETENT until clear of obstacle, then
  - Best Rate 75 KIAS
    - Flaps – UP

SHUTDOWN

- Throttle – IDLE
- ELT – CHECK LIGHT OFF
  CHECK signal on 121.5 MHz
- Ignition Switches – BOTH OFF
- Avionics Switch – OFF
- Master Switch – OFF
- Tie Down– Control locks – Chocks two wheels min.

NOTE

To prevent vapor building in the carburetor after shutdown in hot days, the oil door should be left open to let heat out of the cowl. Leaving the canopy in the open position latched with the F-1231G Canopy Catch, will reduce the risk of vapor-lock

NOTE

If high winds are anticipated, the aircraft should be hangered. If the aircraft must be left out, park into the wind and use additional tie-down ropes for security. Place the flaps in the full up position and secure the control stick full aft with the lap belt.

SECTION 5

FLIGHT PERFORMANCE

INDEX

GENERAL

This data is to inform the pilot what can be expected from the aircraft in the way of performance and to assist in preflight planning.

The data has been compiled from both estimated calculations and actual flight test using average piloting techniques, with an aircraft and engine in good operating conditions. All information is corrected for standard atmospheric conditions.

AIRSPEED CALIBRATION TABLE

CALIBRATED AIRSPEED	INDICATED AIRSPEED	
	SKYVIEW	G3X
45	45	45
50	50	50
55	54	55
60	58	60
65	65	65
70	69	70
75	75	75
80	78	80
85	84	85
90	89	90
100	100	100
110	110	110
120	120	120
130	130	130
140	140	140
150	150	150

STALL SPEEDS (KIAS)

	GROSS WEIGHT	
FLAP POSITION	1050 lb	1320 lb
UP	41	45
½ DOWN	39	43
FULL DOWN	37	41

TAKE-OFF & CLIMB PERFORMANCE @ 1320lb

PRESS ALTITUDE (FT)	TEMP (ºF)	TAKE-OFF DISTANCE (FT)		MAX RATE OF CLIMB (FT/MIN)
		GROUND ROLL	50 FT OBSTCL	
SEA LEVEL	0	589	1091	1156
	20	641	1188	1069
	40	696	1291	985
	60	750	1397	906
	80	812	1519	831
	100	873	1647	758
2000	0	681	1263	1007
	20	742	1380	921
	40	805	1505	839
	60	871	1642	761
	80	939	1790	687
	100	1010	1954	616
4000	0	790	1474	858
	20	860	1619	774
	40	933	1777	693
	60	1010	1952	617
	80	1089	2150	544
	100	1171	2379	474
6000	0	917	1742	710
	20	999	1927	627
	40	1084	2138	548
	60	1173	2384	473
	80	1265	2680	401
	100	1360	3060	333
8000	0	1068	2097	562
	20	1163	2355	481
	40	1262	2671	403
	60	1365	3082	330
	80	1472	3678	259
	100	1583	4720	192

Date: 03/07/16 Revision:3

TAKE-OFF & CLIMB PERFORMANCE @ 1050 lb

PRESS ALTITUDE (FT)	TEMP (ºF)	TAKE-OFF DISTANCE (FT)		MAX RATE OF CLIMB (FT/MIN)
		GROUND ROLL	50 FT OBSTCL	
SEA LEVEL	0	471	951	1455
	20	513	1034	1345
	40	557	1122	1241
	60	600	1212	1141
	80	650	1314	1046
	100	699	1421	956
2000	0	545	1098	1268
	20	594	1197	1160
	40	644	1303	1057
	60	697	1416	959
	80	751	1539	865
	100	808	1673	776
4000	0	632	1277	1081
	20	688	1397	975
	40	747	1528	874
	60	808	1672	777
	80	871	1830	686
	100	937	2008	598
6000	0	734	1499	895
	20	799	1651	790
	40	867	1821	691
	60	938	2012	596
	80	1012	2233	506
	100	1088	2497	420
8000	0	854	1787	709
	20	930	1990	606
	40	1010	2226	509
	60	1092	2511	416
	80	1178	2877	327
	100	1267	3387	243

LANDING PERFORMANCE – ZERO WIND

DENSITY ALTITUDE (FT)	APPROACH SPEED (KIAS)	LANDING DISTANCE (FT)	
		GROUND ROLL	50 FT OBSTCL
0	55	525	1550
2500	55	565	1615
5000	55	610	1695
7500	55	660	1770

NOTES:

1) Decrease the distances shown by 10% for each 5 kts of headwind.
2) The data given is with flaps fully extended

CRUISE PERFORMANCE

DENSITY ALTITUDE (FT)	RPM	TAS (KTS)	FUEL BURN (GAL/HR)	ECONOMY (NM/GAL)	ENDURANCE HR:MM	RANGE (NM)
2500	5500	116	5.7	20.2	3:24	394
	5000	103	4.4	23.4	4:25	456
5000	5500	114	5.0	22.7	3:53	443
	5000	101	4.0	25.3	4:53	493
7500	5500	114	4.6	25.0	4:14	482
	5000	101	3.7	27.4	5:17	534
10000	5500	113	4.2	26.9	4:38	524
	5000	100	3.4	29.6	5:45	576

NOTES:

1) No fuel allowance is made for take-off, climb, descent, or reserve.

SECTION 6

WEIGHT & BALANCE & EQUIPMENT LIST

INDEX

GENERAL

It is the pilot's responsibility to ensure that the aircraft is loaded properly and within the weight and balance limitations. All flight performance, procedures and characteristics are based on this prerequisite.

The actual licensed empty weight and CG of a specific aircraft can be found on the Weight and Balance Form which is a permanent part of the aircraft's file and onboard documentation. All additional changes to the aircraft's empty weight and CG after the time of manufacture must also be attached to or indicated. From this information and the following instructions, the pilot can easily determine the useful load and proper loading distribution for the aircraft.

OPERATING WEIGHTS & LOADING

Category	Max Weight	Center of Gravity Range
Light Sport	1320 lb	80.49” to 85.39” (18.4 to 27% Chord)

NOTE

All measurements are aft of the datum line which is 70 inches forward of the wing leading edge.

Baggage 50 lb maximum

For Installed Equipment List see the Maintenance Manual.

OPTIONAL EQUIPMENT LIST

ITEM	WEIGHT Lbs.	ARM In.	INSTALLED	MOMENT In-lbs.
TOTAL		--------		

THIS PAGE INTENTIONALLY LEFT BLANK

SAMPLE LOADING PROBLEM

ITEM	ARM (IN.) (LIMITS 80.49-85.39)	SAMPLE AIRPLANE	
		WEIGHT (LB)	MOMENT (IN-LB)
EMPTY WEIGHT WITH OIL & COOLANT	81.93	738	60468
PILOT	78.85	190	14982
PASSENGER	78.85	190	14982
BAGGAGE	110.81	50	5541
FUEL (6 LB/GAL)	110.28	119	13101
TAKEOFF WEIGHT & MOMENT	84.75	1287	109073

CG = TOTAL MOMENT / WEIGHT

YOUR AIRPLANE

ITEM	ARM (IN.) (LIMITS 80.49-85.39)	WEIGHT (LB)	MOMENT (IN-LB)
EMPTY WEIGHT WITH OIL & COOLANT			
PILOT	78.85		
PASSENGER	78.85		
BAGGAGE	110.81		
FUEL (6 LB/GAL)	110.28		
TAKEOFF WEIGHT & MOMENT			

CG = TOTAL MOMENT / WEIGHT

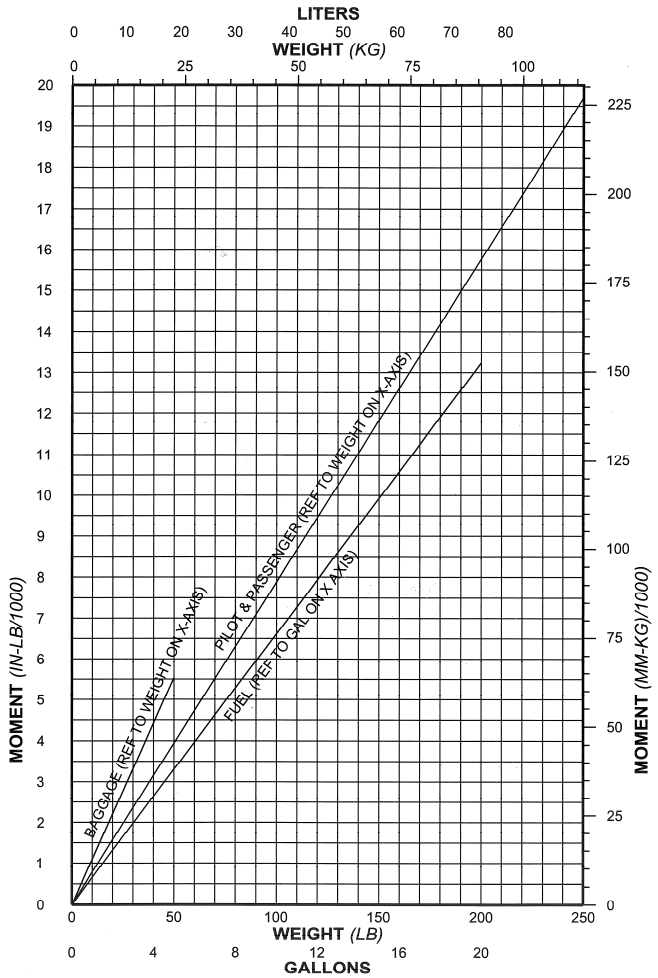

FIGURE 6-1 LOADING GRAPH

Minimum Weight vary depending on the empty weight of the aircraft

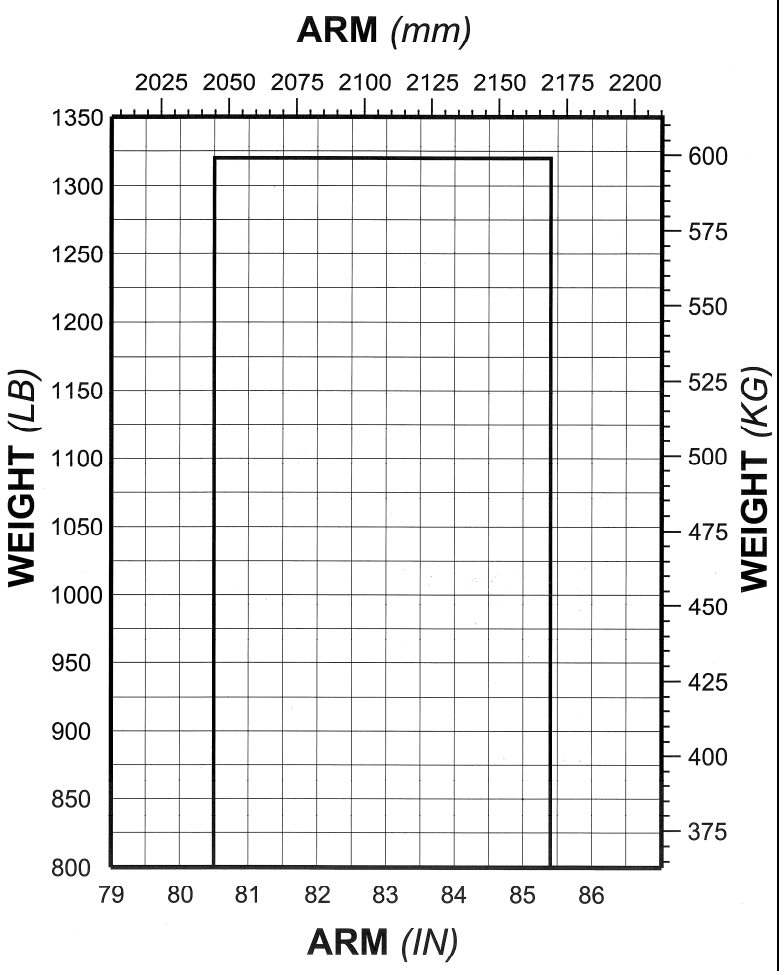

FIGURE 6-2 FLIGHT ENVELOPE
Minimum Weight vary depending on the empty weight of the aircraft

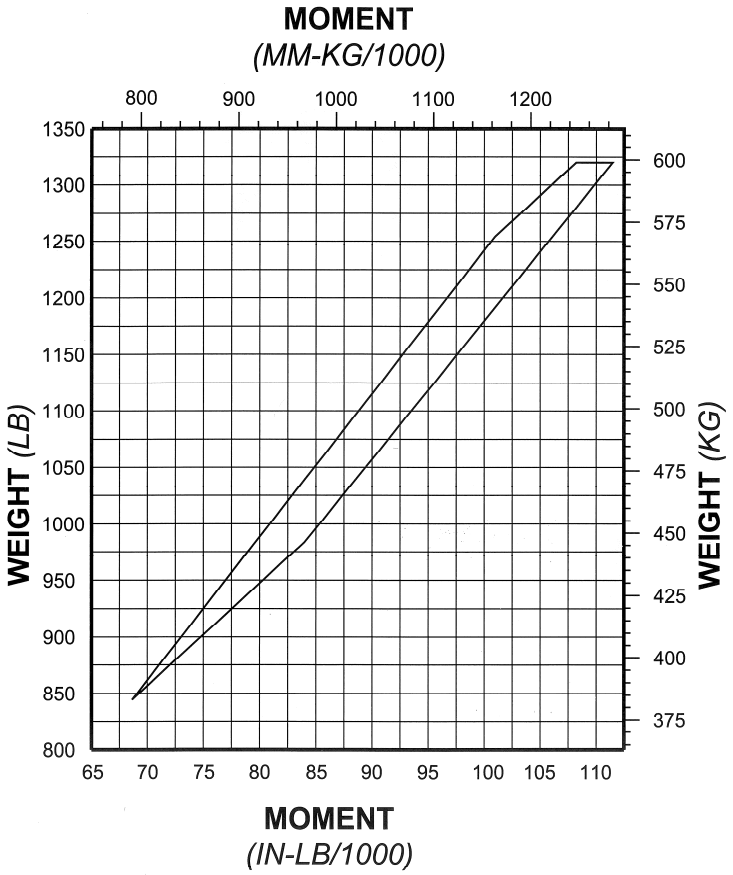

FIGURE 6-3 FLIGHT ENVELOPE
Minimum Weight vary depending on the empty weight of the aircraft

THIS PAGE INTENTIONALLY LEFT BLANK

SECTION 7

DESCRIPTION OF AIRCRAFT & SYSTEMS

INDEX

RV-12 GENERAL DESCRIPTION

AIRFRAME

The RV-12 is an all metal, two place, low wing, single engine fixed tricycle gear airplane designed to conform to the S-LSA category.

The fuselage is made of conventional formed sheet bulheads, stringers and skin. (Semi-monocoque)
A major item of the fuselage is the center section bulkhead that support the loads of each wing spar and main landing gear.

The removeable constant chord wings are built around a main spar that connect to the center section bulkhead.
The empennage consists of a convetional fin, rudder and a stabilator/anti servo tab.

ENGINE AND PROPELLER

The RV-12 is powered by a Rotax 912 ULS four cylinder, horizontaled opposed, air cooled with liquid cooled cylinder heads, dual carburators, rated at 100 HP/73.5 kW @ 5800RPM. Power to the dual spark plugs is provided by two independent Electronic Ignition units.

The engine is furnished with a starter, a 14 volt generator and external rectifier-regulator.
The propeller is a gear driven Sensenich model 2A0R5R70E, composite two blade, fixed ground adjustable pitch with a 70 inch/177.8cm diameter.

FLIGHT CONTROLS

The full span ailerons and flaps are combined into one unit called flaperons. An internal machanical mixer allows the ailerons, via torque rods, to “droop” performinmg the function of flaps.
The stabilator and rudder are connected to the controls by pull-pull cables. The trim tab is driven by a DC motor.

FLIGHT INSTRUMENTS

The RV-12 instrument panel employs an electronic flight instrument system (EFIS)s display unit. All flight, navigation and engine parameters data are displayed in one screen with an optional second screen.

POWERPLANT SUMMARY

Engine Description

Make	Rotax 912 ULS
Displacement	1352 cc
Ignition	Ducati Double CDI
Carburetors	Bing altitude compensating
Rated Horsepower	100 Hp @ 5800 RPM (5 minutes maximum) 95 Hp @ 5500 RPM (continuous)

Propeller

Make	Sensenich
Model	2AOR5R70E

Fuel See Operating Limitations

Oil See Aircraft Ground Handling and Servicing

RV-12 AIRCRAFT SPECIFICATIONS

Exterior Dimensions

Span	26 ft 9 in
Length	20 ft 7 in
Height	8 ft 4 in
Wing Area	127 ft^2

Weights

Empty Weight	740 lb (average)
Gross Weight	1320 lb

Loadings

Wing Loading	10.4 lb/ft^2
Power Loading	13.2 lb/hp

PERFORMANCE *(1050 lb)*

Speed

Top Speed	119 KIAS
Cruise 5500rpm 7500 ft	117 KIAS
Cruise 5000rpm 7500 ft	105 KIAS
Stall - flaps up	41 KIAS

Ground Performance

Take-off Distance	600 ft
Landing Distance	475 ft

Climb/Ceiling

Rate of Climb	1135 ft/min
Ceiling (estimated)	15,000 ft

PERFORMANCE *(1320 lb)*

Speed

Top Speed	117 KIAS
Cruise 5500rpm 7500 ft	114 KIAS
Cruise 5000rpm 7500 ft	101 KIAS
Stall - flaps up	45 KIAS

Ground Performance

Take-off Distance	700 ft
Landing Distance	525 ft

Climb/Ceiling

Rate of Climb	900 ft/min
Ceiling (estimated)	13,800 ft

Range 5500rpm 7500 ft 482 nm
Range 5000rpm 7500 ft 534 nm

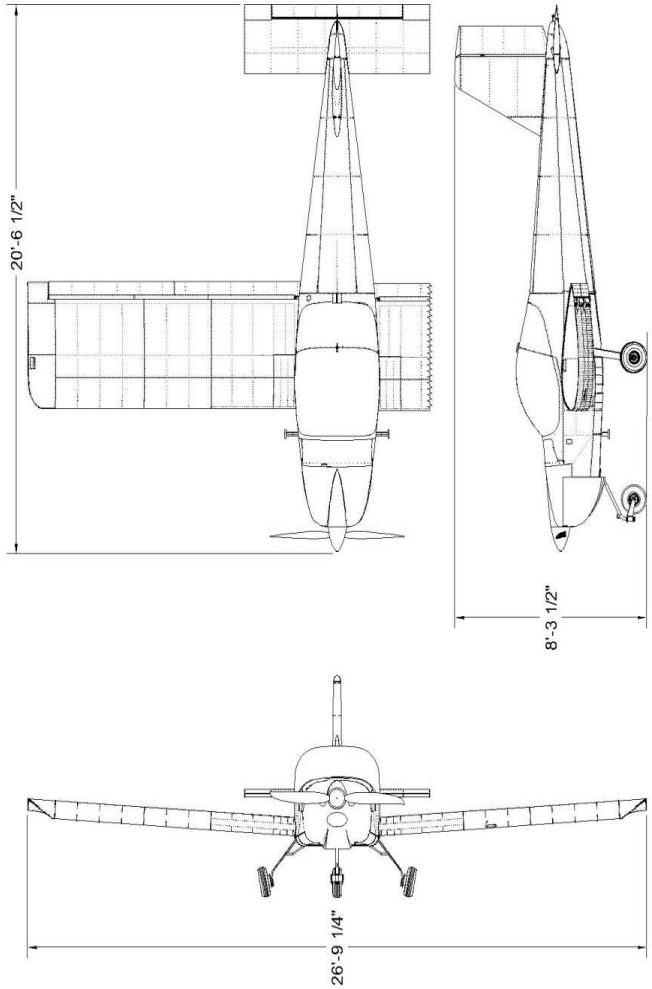

FIGURE 7-1 RV-12 THREE VIEW

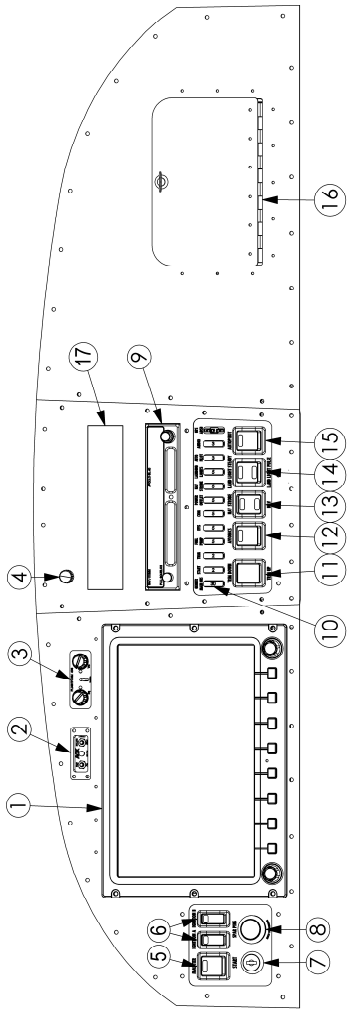

Item	Description	Item	Description	Item	Description
1	EFIS DISPLAY	7	STARTER KEY SWITCH	13	NAV/STROBE SWITCH
2	ACK ELT REMOTE	8	SPAR PIN UNSAFE OVERRIDE	14	LANDING LIGHT SWITCH
3	INTERCOM (with GARMIN SL40 only)	9	GARMIN SL40 or GARMIN GTR-200	15	AUTO PILOT SWITCH
4	DIMMER CONTROL	10	FUSES	16	CHART BOX or optional second EFIS DISPLAY
5	MASTER SWITCH	11	TRIM	17	GMC 305 or SV-KNOBS-
6	IGNITION SWITCHES	12	AVIONICS MASTER		MODULES AP CONTROLLER

FIGURE 7-2 RV-12 INSTRUMENT PANEL

THIS PAGE INTENTIONALLY LEFT BLANK

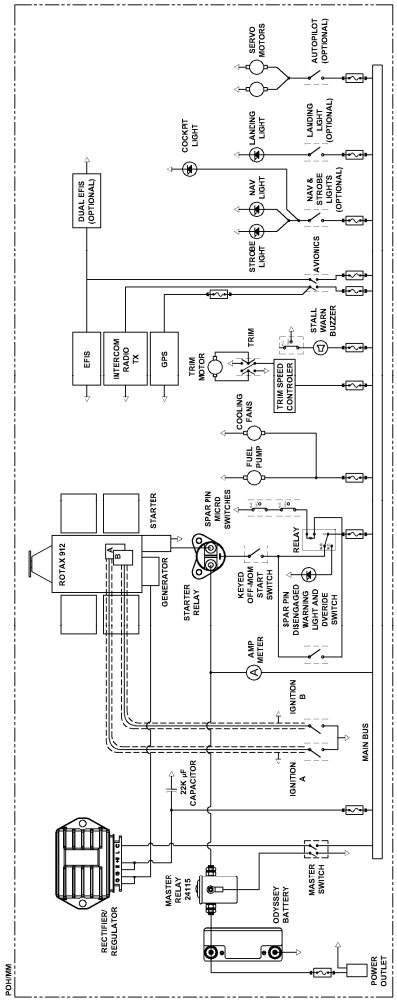

FIGURE 7-3 ELECTRICAL SYSTEM

CAUTION

PLACE MASTER SWITCH IN "OFF" POSITION BEFORE REPLACING ANY FUSE

NOTE

REPLACEMENT FUSES RATED 3 AMP OR GREATER MUST BE OF THE TYPE THAT ILLUMINATE WHEN BLOWN

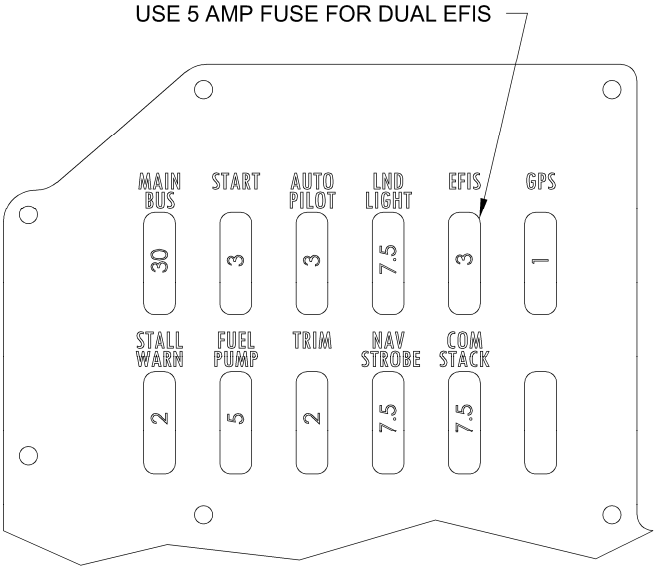

FIGURE 7-4 FUSE PANEL DIAGRAM

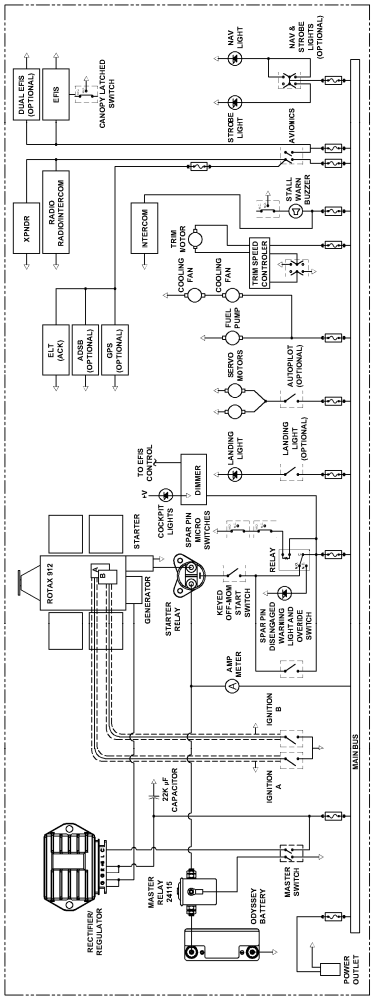

FIGURE 7-3 ELECTRICAL SYSTEM

CAUTION

PLACE MASTER SWITCH IN "OFF" POSITION BEFORE REPLACING ANY FUSE

NOTE

REPLACEMENT FUSES RATED 3 AMP OR GREATER MUST BE OF THE TYPE THAT ILLUMINATE WHEN BLOWN

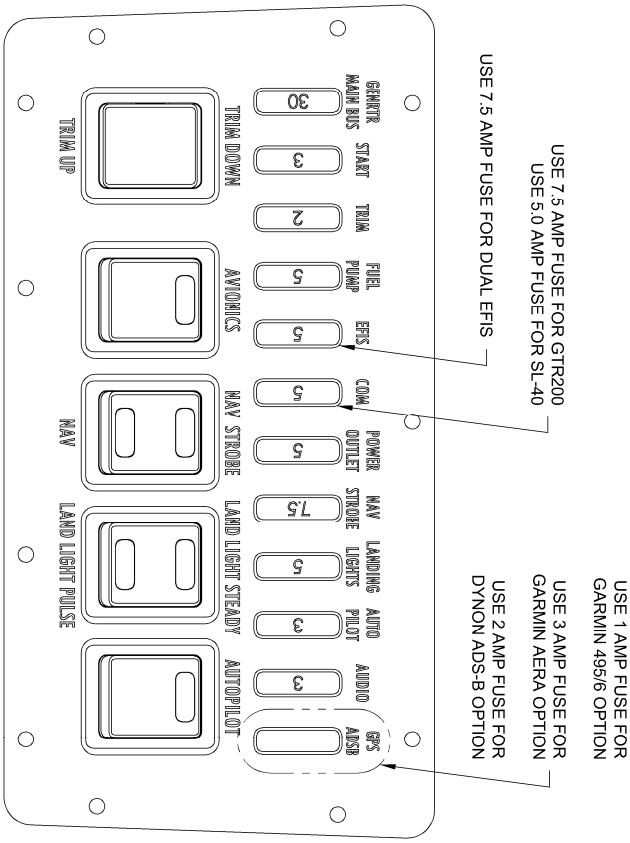

FIGURE 7-4 FUSE PANEL DIAGRAM

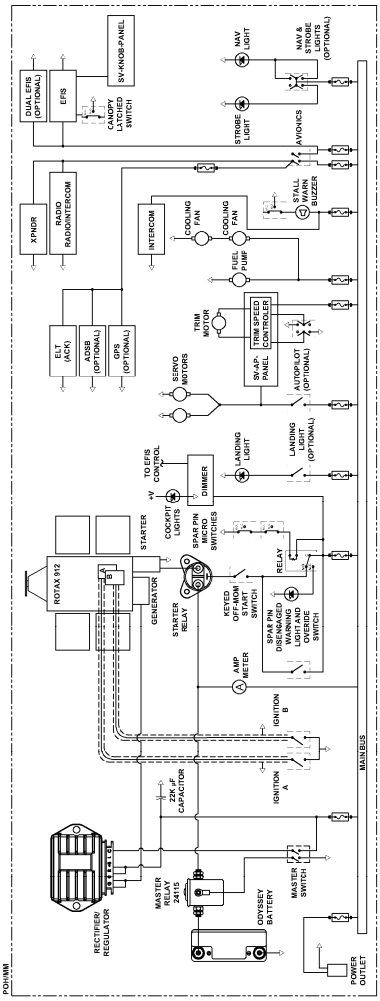

FIGURE 7-3 ELECTRICAL SYSTEM

CAUTION

PLACE MASTER SWITCH IN "OFF" POSITION BEFORE REPLACING ANY FUSE

NOTE

REPLACEMENT FUSES RATED 3 AMP OR GREATER MUST BE OF THE TYPE THAT ILLUMINATE WHEN BLOWN

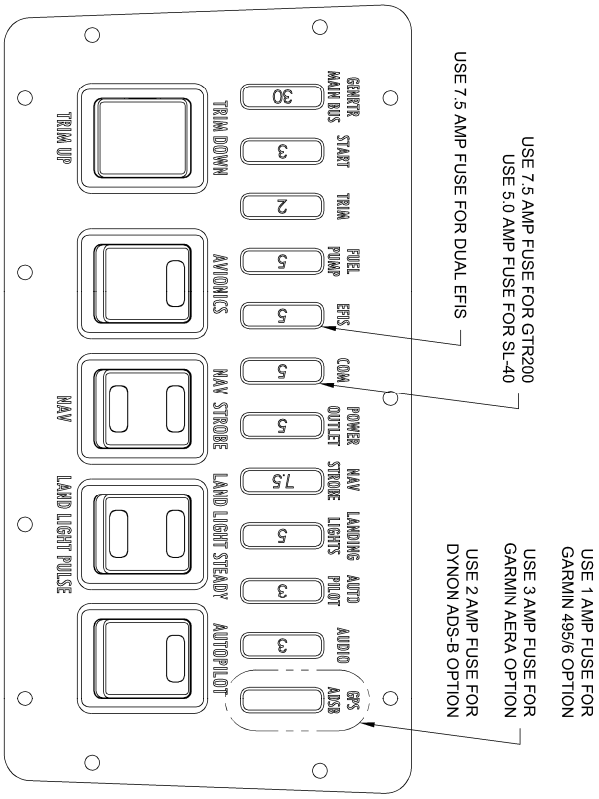

FIGURE 7-4 FUSE PANEL DIAGRAM

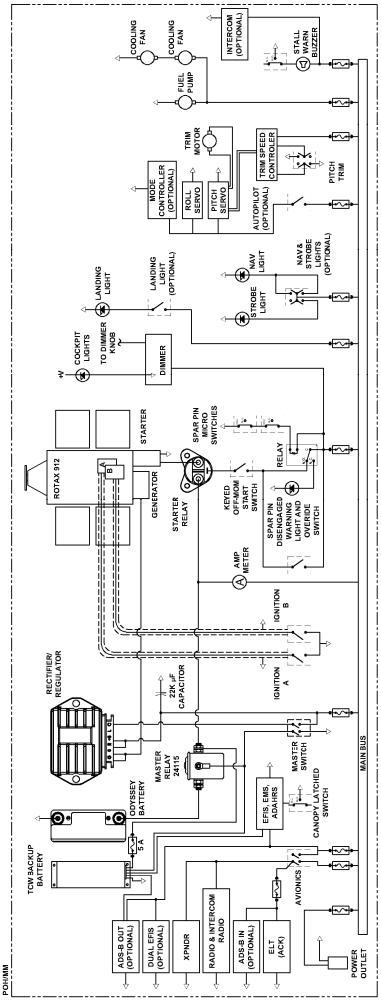

FIGURE 7-3 ELECTRICAL SYSTEM

CAUTION

PLACE MASTER SWITCH IN "OFF" POSITION BEFORE REPLACING ANY FUSE

NOTE

REPLACEMENT FUSES RATED 3 AMP OR GREATER MUST BE OF THE TYPE THAT ILLUMINATE WHEN BLOWN

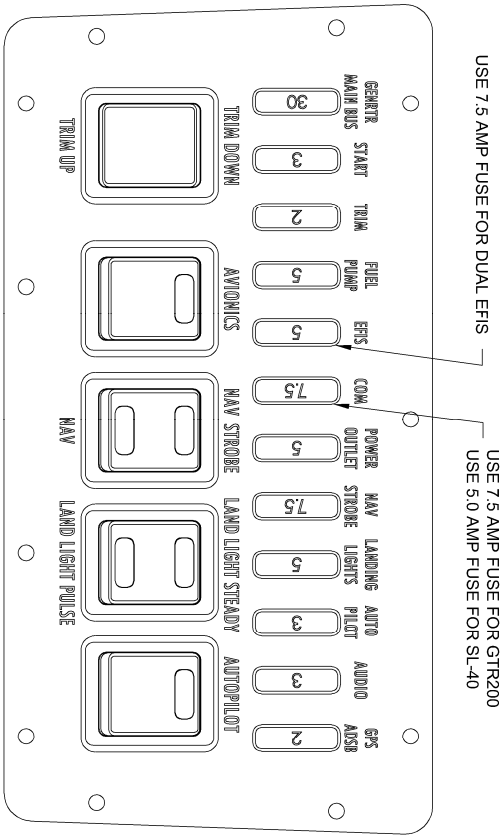

FIGURE 7-4 FUSE PANEL DIAGRAM

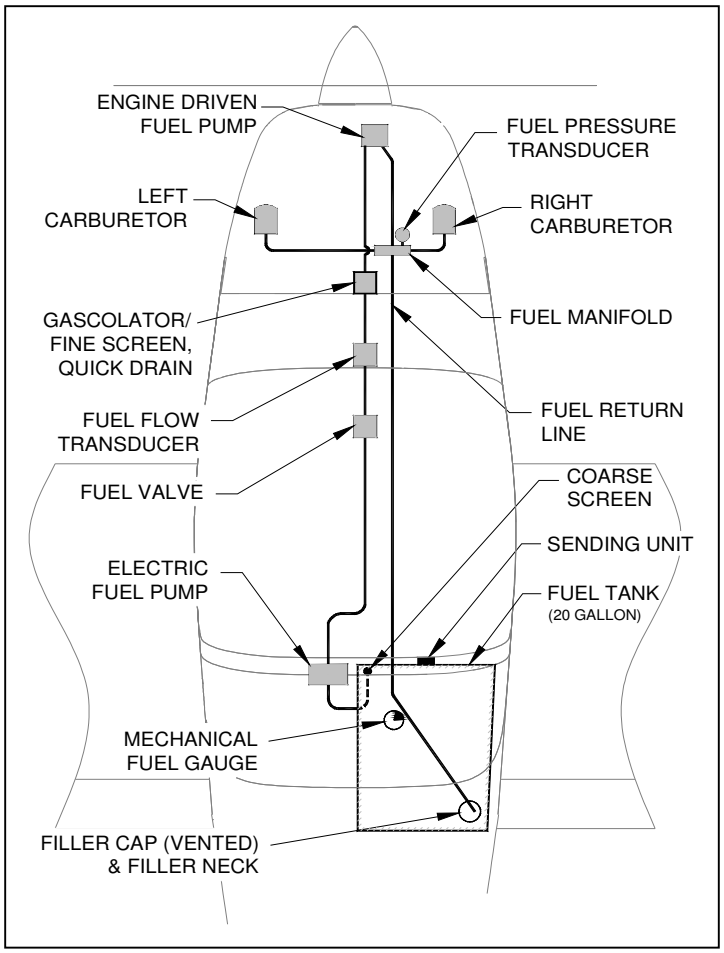

FIGURE 7-5 FUEL SYSTEM

THIS PAGE INTENTIONALLY LEFT BLANK

SECTION 8

AIRCRAFT GROUND HANDLING & SERVICING

INDEX

INTRODUCTION

This section contains factory recommended procedures for proper ground handling and routine service.

In addition, it details some specifications related to the maintenance requirements.

In order to retain the expected performance and dependability, your airplane should be maintained and inspected in accordance with the Engine and Airplane maintenance manuals and issued service bulletins.

TORQUES

TABLE 8-1 ROTAX 912ULS

	ft-lb	in-lb	N-m
Oil Tank Drain Screw	18	220	25
Oil Filter	Hand Tighten		
Magnetic Plug	18	220	25
Water Pump Drain Screw	8	90	10
Carburetor Socket Screws	11	135	15
Spark Plugs 12mm/16mm	15	180	20

FUEL

Octane Rating 91 AKI (premium)

Too low an octane rating will cause pre-ignition and detonation, which can damage the piston ring grooves, skirt and crown. Fuel evaporates and quickly loses its octane rating by osmosis when it lies in a fuel tank or plastic jug. A premium fuel could see its octane rating drop to unusable levels after as little as three weeks. A lower octane rating would have an even shorter usable life.

CAUTION
Use of poor quality fuel or winter blend fuels in hot conditions may result in vapor lock.

Aviation Fuels

Only use 100LL AVGAS and proper engine oil. The oil will need to be changed more frequently, see the Rotax service manual.

Fueling Procedure

- Plane stopped, engine and master power OFF
- Clamp ground line to exhaust pipe.
- Remove filler cap, located right side fuselage aft of rear window.
- Protect rear window from fuel spill.
- Insert fuel nozzle, and add fuel. (Max. 19.8 gallons)
- Remove fuel nozzle.
- Replace fuel cap.
- Remove ground clamp.
- Wipe away spillage, if any.

OIL

Specifications
High quality 4-stroke motorcycle oil with gear additives and a “SF” or “SG” API classification.

Type
If running unleaded fuel use full-synthetic or semi-synthetic oils.
If running 100LL AVGAS more than 30% of the time use mineral or semi-synthetic oils.

Viscosity
Use Chart to determine the viscosity.

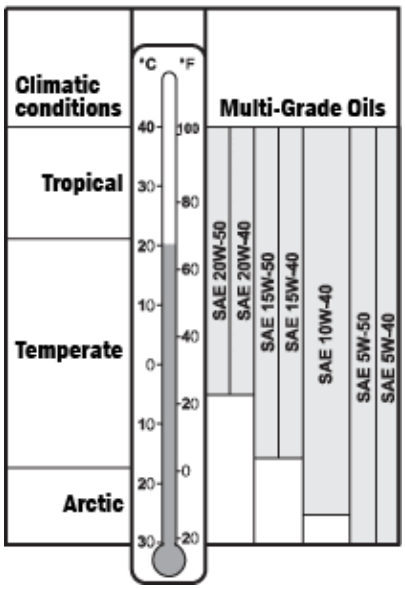

FIGURE 8-1
VISCOSITY

Oil Types to Avoid
- Oils with friction modifier additives “anti-friction”, will cause the slipper clutch to slip
- Oils for “conventional” aircraft engines
- Oils designed for diesel engines with insufficient high temp properties and additives

Oil Filter
Rotax part number 825 701

COOLANT

Type
50% long life antifreeze concentrate without sulfates and phosphates, with anticorrosion additives designed for aluminum mixed with 50% distilled or de-mineralized water.

SPARK PLUGS

Type	Socket	Electrode Gap
NGK DCPR8E	16mm	.7-.8 mm/.028-.032 in

EXHAUST

Lubricate ball joints regularly with anti-seize lubricant (Loctite Anti-seize) to prevent gripping and seizing of the joints.

TIRES & TUBES

All three tires are 5.00 x 5 size and either 4 ply load rating or 6 ply load rating tires are acceptable.

Inflation Pressure:

Nose Tire:	22 psi (optimum)/23 psi (maximum)
Main Tires:	25 psi (optimum)/28 psi (maximum)

WING REMOVAL/INSTALLATION

Removal and installation of the wings requires two people, one to hold the wing at the tip end and the second person to hold the stub end of the wing. The person handling the tip end of the wing must hold the flaperon approximately in trail as it will tend to flip around and possibly become damaged when disengaged from the fuselage.

REMOVAL

1. Withdraw each of the fuselage pins only enough to release the right wing spar.
2. Remove the right wing assembly and set aside.
3. Remove both of the fuselage pins.
4. Remove the left wing and set aside.

INSTALLATION

Installation procedure is reverse of the removal procedure

TOWING
Towing is done with the collapsible rudder lock/tow bar connected to the nose wheel.

TIE DOWN
If possible orient the aircraft such that the nose is facing into the wind. With the flaps retracted, tie down the wings first with ropes/chains pulling outward and slightly forward from the wing tie-down points. With the wings secured, pull the aircraft backward to remove slack from the ropes/chains on the wings then attach the tie-down rope/chain to the tail tie-down point.

The RV-12 has 4 tie down points. The tail of the airplane has Bolt eye TD 3/8-16 which can be used to tie-down the airplane to the ground. Also on each wing, a Bolt eye TD 3/8-16 tie down can be installed using the pre-threaded hard points.
The nose strut can also provide a tie down using the eyelet above the wheel fairing. The flaperons and stabilator controls are secured by fastening the pilot side lap belt around the stick.
The rudder is secured by installing the collapsible tow bar/rudder lock.

CLEANING & CARE
Clean windshield surfaces only with plastic compatible cleaner designed specifically for airplane windshields.

It is also important to rub the surface gently straight up and down. Using circular wiping motion may create a permanent halo in the windshield. Remove dirt and insects from painted surfaces with water alone and if necessary with a mild detergent or automotive paint cleaner. Remove oil stains, exhaust stains and grime on the lower fuselage skin with a cold detergent.

THIS PAGE INTENTIONALLY LEFT BLANK

SECTION 9

SUPPLEMENTARY INFORMATION

See the Flight Training Supplement

THIS PAGE INTENTIONALLY LEFT BLANK

RV-12
PILOT'S OPERATING HANDBOOK

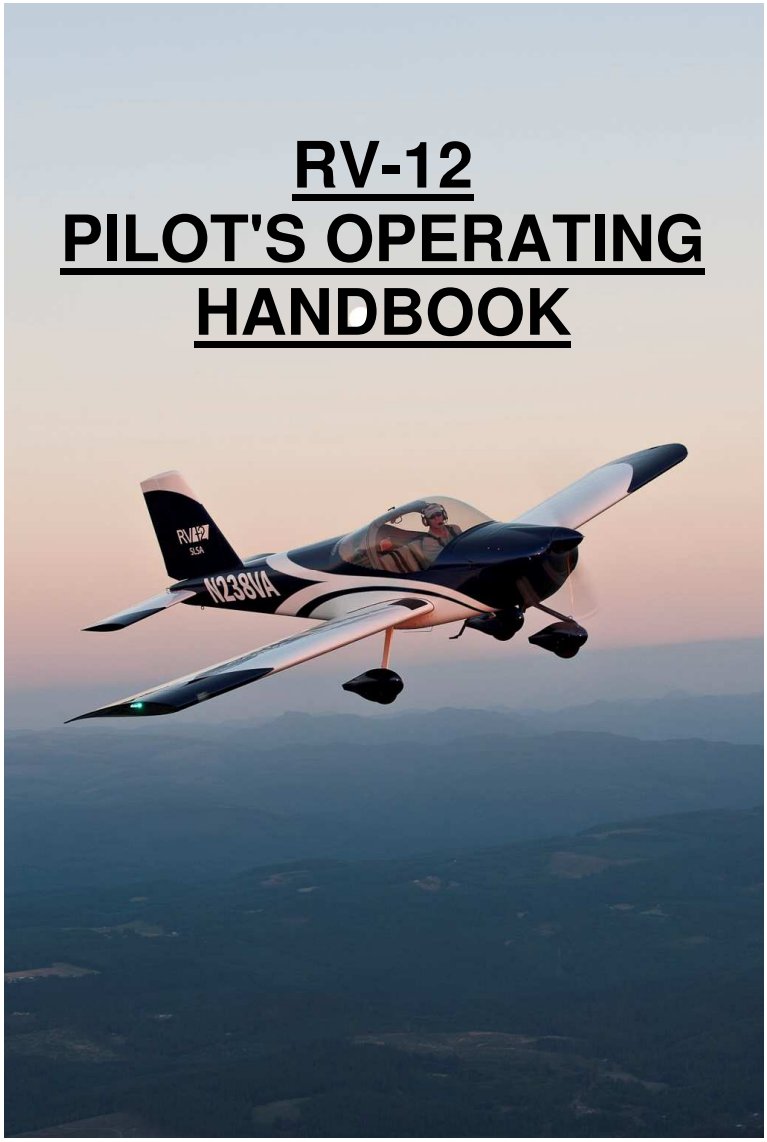

THIS PAGE INTENTIONALLY LEFT BLANK


RV-12
PILOT

THIS PAGE INTENTIONALLY LEFT BLANK